Lubricant for steel-supported ball joints of connecting rod (vehicles up to March 1971)[1])

Grease type	Longterm lubricating grease (refer to specifications for service products page 266.2)

[1]) Ball joints with plastic bearings (standard starting April 1971) require no service.

Tightening torque		Nm
Hex. head and hex. socket screws on level controller		45
Connection to level controller	M 14 x 1,5	25
	M 10 x 1	15
Cap screws of pressure oil lines	M 10 x 1	15
	M 12 x 1	20

Special tools

Filling funnel with filter	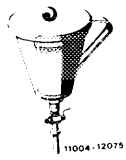	126 589 12 63 00
Box wrench insert open 11 mm 1/4" square complete with change-over ratchet and 2 extensions for pressure oil lines	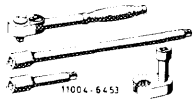	116 589 00 17 00

Conventional tools

Open double-box wrench 10 x 11 mm	e.g. made by Hazet, D-5630 Remscheid, order no. 612
Open double-box wrench 12 x 14 mm	

Note

The level controller is provided with a bleed screw as standard equipment since March 1977. Simultaneously, the distributor with bleed screw installed up to now on model 116 and 123 in oil line from level controller to lefthand pressure reservoir is no longer installed.

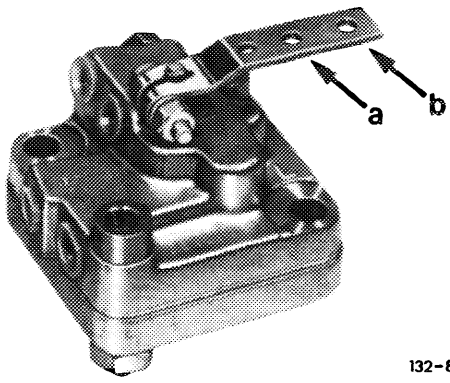

Level controller
1st version

132-8611/1

Upon removal of bleed screw, the required checkup can be performed (refer to 32–520, 32–530).

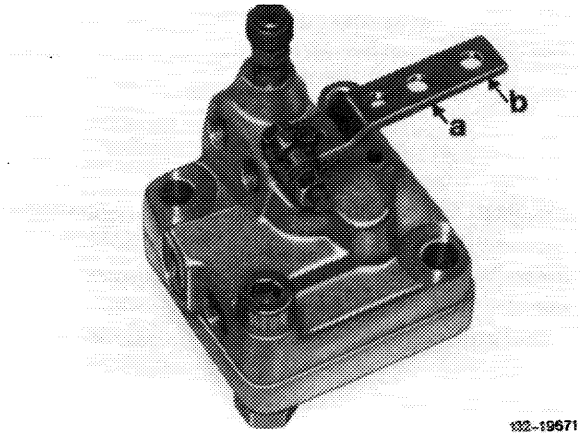

Level controller with bleed screw
2nd version

Model 123

Since February 1979 the cross section of the pressure line leading from HP expanding hose to level controller has been reduced to 6 mm dia. (up to now 8 mm). As a result, the line connections have been changed from formerly M 14 x 1.5 to now M 12 x 1.

For this reason, starting February 1979 (on model 123.0 up to September 1979) the connections of the valid HP expansion hose have also been changed. The level controller is provided with a pertinent connection.

Spare parts

Model	Designation	Part no.
123.1	HP expansion hose	123 320 39 72
123.083/020/023/000/043	HP expansion hose	123 997 76 82
123.003/026/028/086	HP expansion hose	123 320 38 72
123.007/030/033/050/ 053/093	HP expansion hose	123 997 77 82
123.026/030/033/086/ 093/102/120/123/ 130/183/190	Pressure oil line 6 mm dia.	123 320 31 72
123.003/007/028/103/ 105/125/132	Pressure oil line 6 mm dia.	123 320 35 72
123.050/053	Pressure oil line 6 mm dia.	123 320 33 72
123.083/020/023/000	Pressure oil line 6 mm dia.	123 320 32 72
123.043	Pressure oil line 6 mm dia.	123 320 34 72
123.026/030/033/086/ 093/102/120/123/ 130/183/190	Oil line (return flow)	123 320 27 72

123.003/007/028/103/ 105/125/132	Oil line (return flow)	123 320 28 72
123.050/053	Oil line (return flow)	123 320 29 72
123.083/020/023/000/043	Oil line (return flow) front	123 320 07 72
123.020/023/000	Oil line (return flow) rear	123 320 06 72
123.043	Oil line (return flow) rear	123 320 16 72
123.0 132.1	Rubber slider (oil lines on frame floor)	123 328 02 84
123.0 123.1	Connection (level controller)	123 327 03 65

Responsible for delivery: Plant 50 (PEW Sindelfingen)

Removal

1 Drain pressure oil system (32–630).

2 Loosen line connections (B1, B2 and C), using open-box wrenches.

Model 116
Layout of level controller
1st version

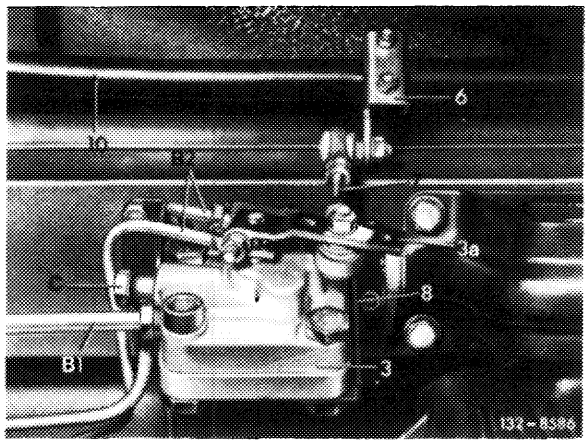

3 Level controller
3a Lever on level controller
6 Lever on torsion bar
7 Connecting rod
8 Bracket
10 Torsion bar

B1 Pressure line pressure oil pump—lever controller
B2 Pressure line level controller—pressure reservoir
C Return line level controller — oil supply tank

Attention!
On level controller, never loosen clamping screw for fastening lever on control shaft.

A subsequent location of lever in relation to control shaft is not possible.

Model 123
Layout of level controller
without bleed screw
1st version

3	Level controller	B1	Pressure line pressure oil pump – level controller
3a	Lever on level controller	B2	Pressure line level controller – pressure reservoir
6	Lever on torsion bar	C	Return flow line level controller – oil supply tank
7	Connecting rod		
8	Bracket		
10	Torsion bar		

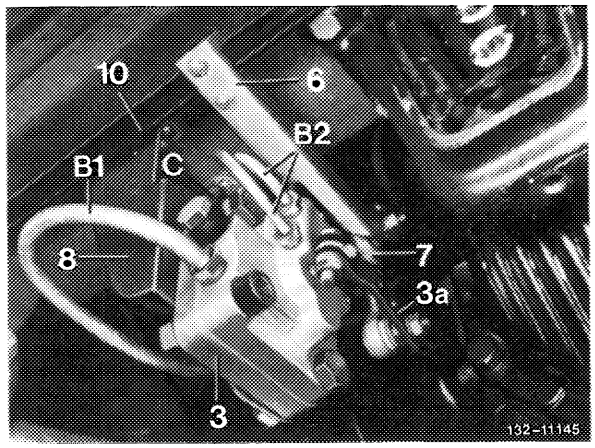

Model 123
Layout of level controller with bleed screw
2nd version starting March 1977

3	Level controller	B1	Pressure line pressure oil pump – level controller
3a	Lever on level controller	B2	Pressure line level controller –pressure reservoir
6	Lever on torsion bar	C	Return flow line level controller – oil supply tank
7	Connecting rod		
8	Bracket		
10	Torsion bar		
11a	Bleed screw		

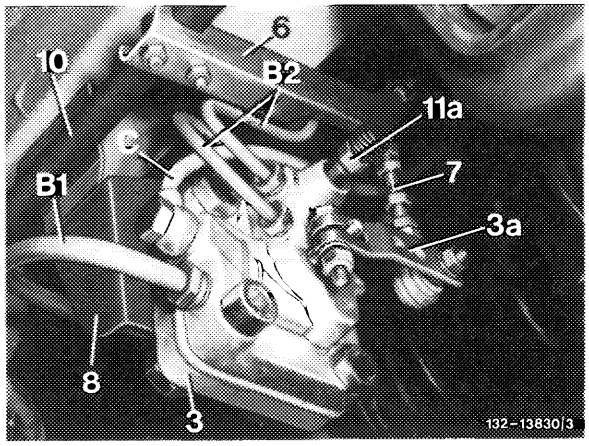

Model 123
Layout of level controller with connection
Present version

3	Level controller	B1	Pressure line pressure oil pump – level controller
3a	Lever on level controller	B2	Pressure line level controller – pressure reservoir
3l	Connection for pressure line (B1)	C	Return flow line level controller – oil supply tank
6	Lever on torsion bar		
7	Connecting rod		
8	Bracket		
10	Torsion bar		
11a	Bleed screw		

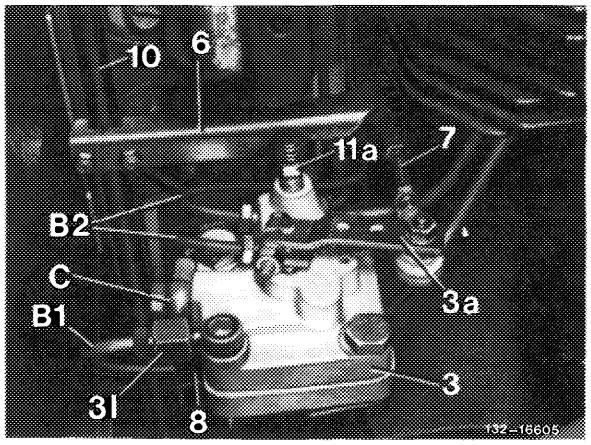

Model 126
Layout of level controller

3	Level controller	10	Torsion bar
3a	Lever on level controller	11a	Bleed screw
3l	Connection for pressure line (B1)	B1	Pressure line pressure oil pump – level controller
3m	Connection for return flow line (C)	B2	Pressure line level controller – pressure reservoir
6	Lever on torsion bar	C	Return flow line level controller – oil supply tank
7	Connecting rod		
8	Bracket		

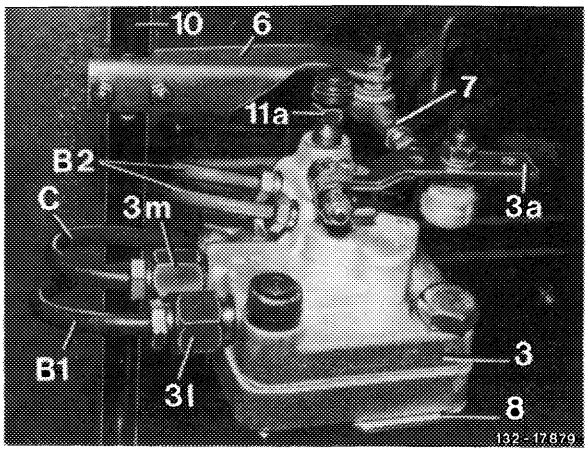

3 Unscrew connecting rod (7) on lever (3a) of level controller.

Attention!
To loosen connecting rod, unscrew hex. nut on lever (3a) of level controller. If required, hold ball pin of plastics-mounted ball joints with open-end wrench 10 mm or hold ball pin of steel-supported ball joints with an angular screw driver.

On plastics-mounted ball joints **never** pull ball pin **out of ball socket.**

4 Loosen both hex. screws for attaching level controller to bracket (8) and remove controller.

Note: In the event of leaks, mount new O-ring, part no. 006 997 69 45 on parting surfaces of both housings.

Installation

Attention!
When exchanging a level controller on model 123 (version with pressure line connection M 12 x 1) transfer connection (3l), part no. 123 327 03 65, of pressure line (B1), and on model 126 additionally connection (3m), part no. 123 327 04 65, of return flow line (C). Also replace copper sealing ring (3n).

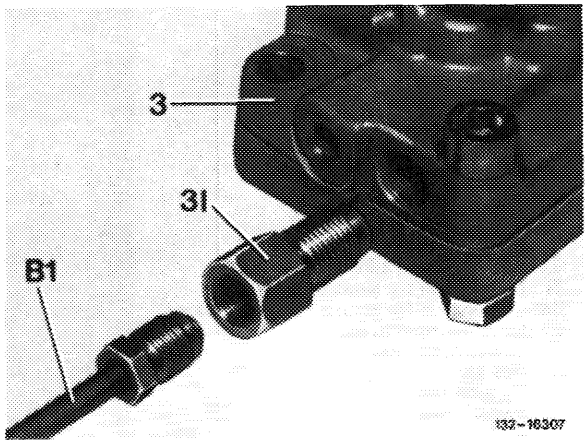

Model 123

The four bolts for housing halves of level controller should be tightened when level controller is energized with oil pressure.

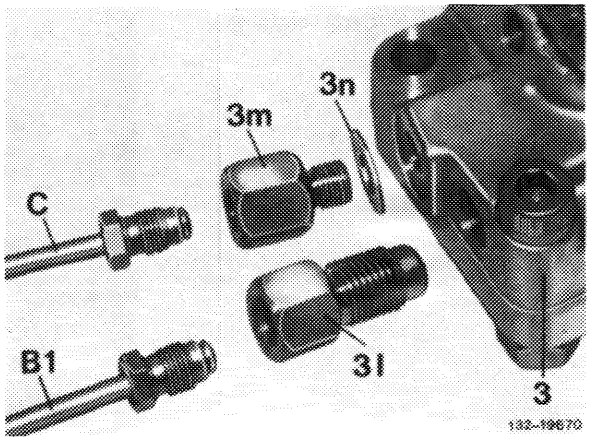

Model 126

5 Attach level controller to bracket, connect oil lines.

Model 107, 114, 115
Layout of level controller

3 Level controller
3a Lever on level controller
6 Lever on torsion bar
6a Fastening clip
7 Connecting rod
7a Ball joint
7b Locking clip
7c Sealing washer
8 Bracket
10 Torsion bar

B1 Pressure line pressure oil pump – level controller
B2 Pressure line level controller – pressure reservoir
C Return line level controller – oil supply tank

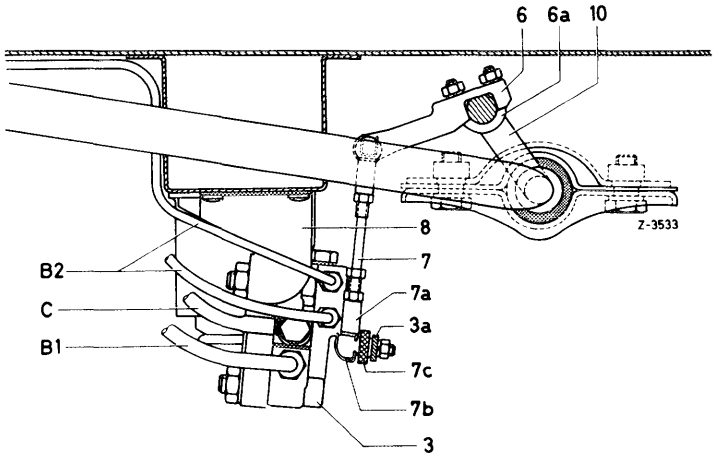

Model 123
Layout of level controller

3 Level controller
3a Lever on level controller
3l Connection for pressure line (B1)
6 Lever on torsion bar
7 Connecting rod
8 Bracket
10 Torsion bar
11a Bleed screw

B1 Pressure line pressure oil pump – level controller
B2 Pressure line level controller – pressure reservoir
C Return flow line level controller – oil supply tank

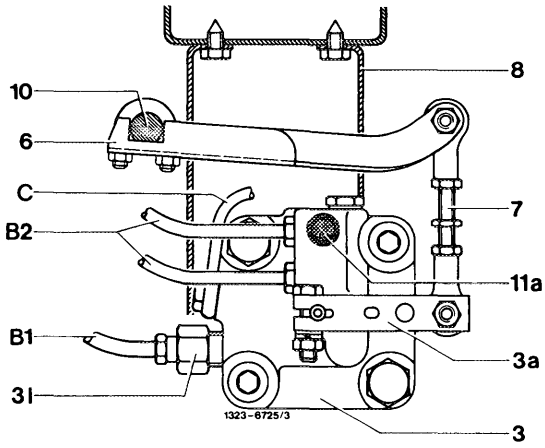

Model 126
Layout of level controller

3 Level controller
3a Lever on level controller
3l Connection for pressure line (B1)
3m Connection for return flow line (C)
6 Lever on torsion bar
7 Connecting rod
8 Bracket
10 Torsion bar
11a Bleed screw

B1 Pressure line pressure oil pump – level controller
B2 Pressure line level controller – pressure reservoir
C Return flow line level controller – oil supply tank

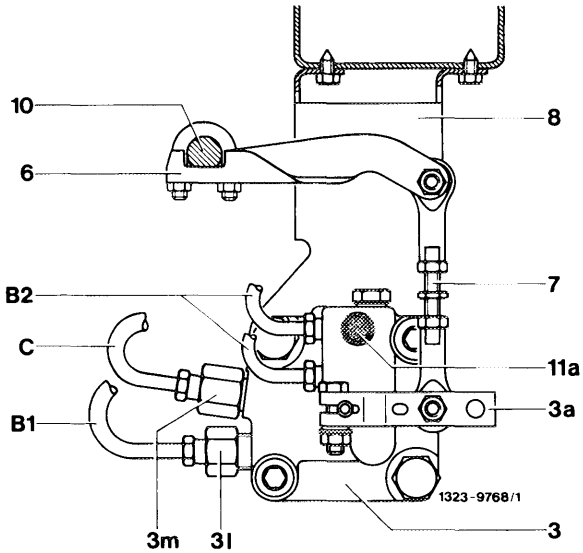

6 Check ball joints of connecting rod for easy operation and wear.

On version with steel joints, remove safety clip (7b) and pull off ball pin. Provide ball sockets with grease. Renew damaged sealing washers (7c) or worn ball joints.

Plastics mounted joints require no service (32–660).

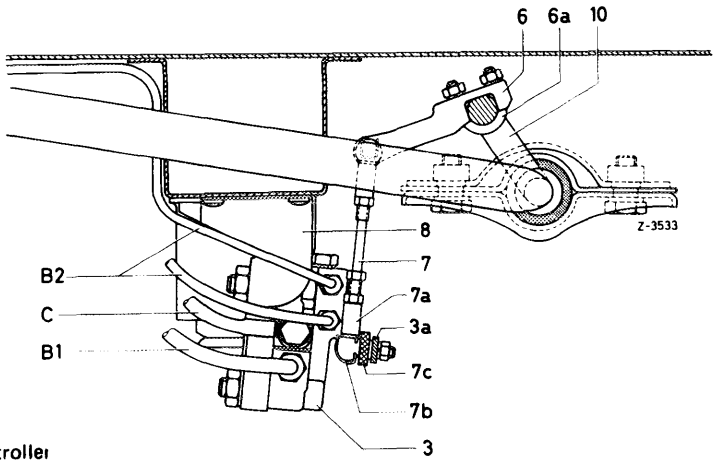

Model 114, 115
Layout of level controller

7 Attach connecting rod to lever of level controler. If required, hold ball pin with angular screw driver or 10 mm fork wrench.

8 Check vehicle level (40–310).

9 Check adjustment of headlights, if vehicle level has been changed.